ESG®

Perfect Valves For The World !

Qingdao Elite Machinery Manufacture Co., Ltd.

Add: No. 15, 1st Jinshajiang Rd., Tongji Industry Zone, Jimo, Qingdao, China, 266228

Phone: +86-532-82515557 Web: www.esgvalve.com Email: info@esgvalve.com

2023 English edition

ESG®

www.esgvalve.com

QINGDAO ELITE MACHINERY MANUFACTURE CO., LTD.

Elite | **S**ervice | **G**lobal

INDUSTRIAL FLOW CONTROL EXPERT

ESG Official Wechat

ESG Corporate Website

ESG®

With more than 20 years of dedication in valve industry,
ESG is recoganized as a leading manufacturer of pneumatic valves.

Company Profile

- Vision:
  Become top benchmark of valve industry and build time-honored enterprise
- Mission Statement:
  Continuously contribute to industrial evolution, while nurturing financial well-being and promoting personal fulfillment for each and every member of ESG family.
- Core Value:
  Align with Inner Conscience
  Build Reliable products
  Grow as a Trustworthy Company
- Enterprise Spirit:
  Effective, pragmatic, rigorous and innovative
- Management Ideation:
  People-centered and Virtue-oriented
  Take skill as pride and quality as priority
- Action Motto:
  Prepare methodically
  Execute effectively
  Improve continuously

Qingdao Elite Machinery Manufacture Co., Ltd is one of the world's leading manufacturers of pneumatic valves and well known for the brand ESG valve. We are a one-stop valve supplier integrating in-house design, manufacture and global sales of pneumatic valves.

ESG has been serving over 4000 customers in 80 countries around the world. Reliable quality, timely delivery and quick response service win us from our customers high acknowledgment and affirmation. We maintain a long-standing cooperation with many Fortune 500 companies, like GM, Emerson, Xylem and Samsung.

ESG is equipped with advanced stainless-steel precision casting lines, CNC production lines, and valve assembly & test lines. The company uses world class inspection equipment, including Spectromax meter, Brown & Sharp CMM inspection machine, optical measuring machine, surface roughness tester and hardness tester, and has obtained multiple international certifications, such as ISO9001, CE, CU-TR, FDA, USP, and ATEX. By now, we have obtained 67 patents and registered ESG brand in more than 30 countries, including the United States, Germany, France, Japan, Russia, Portugal and Australia.

For over 20 years, we have been devoting a lot of time and energy to "Perfect Valve for The World" . ESG will be dedicated to flow control innovation and constant optimization to deliver maximum customer benefit.

ESG®

With strong sense of responsibility and advanced production equipment,
ESG makes every effort to earn your trust through every product we build.

Casting

ESG precision casting lines are equipped with state-of-the-art precision equipment and are capable of producing components weighing between 1g to 15kg, with precision level ranging from CT6 to CT3, at max annual capacity of 1000 tons. SS304 and SS316 are the common used material, other materials are also available upon request.

ESG®

Strict end-to-end production process control
ensures uncompromised product quality

Machining, Assembly and Warehousing

Top-notch machining equipment produces products with excellent quality. ESG invested in first-class production equipments, building modern workshops, and standardizing production procedures so that every employee can follow the same highly efficient production process.

Advanced automatic production equipments and crafted assembly line operation ensure the stability and reliability of the product.

ESG®

Relentless pursuit of quality is throughout our whole workflow from R&D, production to after-sale service.

Quality

We have a number of professional personel, specialized labs and equipments

- Chemical and Mechanical lab for steel property analysis
- Flow lab, life cycle tesing lab and performance testing lab for function analysis
- 16 quality engineers and inspectors

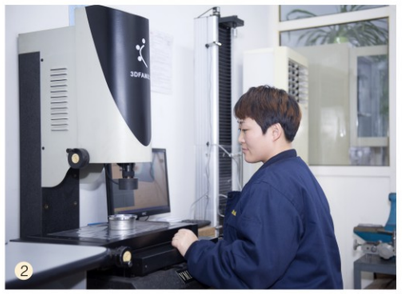

1 Three-coordinate measuring machine
2 Optical measuring machine
3 Roughness tester
4 Valve flow laboratory
5 Valve life laboratory
6 7 8 Valve seal test station
9 Diaphragm valve high-temp steam life test station
10 Spectrum analyzer
11 Filling valve life test station

ESG®

Perfect management system, ESG products are trustworthy

Qualification

ISO9001 Quality Management System Certification, EU CE Certification, Russian CU-TR Certification, US FDA, EC 1935, USP, and many other international qualifications

Intellectual Property Management Certification

Brand certificate

China ESG Brand | US ESG Brand | Portuguese ESG Brand | German ESG Brand | Australian ESG Brand | French ESG Brand | Japanese ESG Brand

Intellectual Property Certificate

ESG serves as your industrial automation partner,
offering a large selection of reliable and innovative products.

Application Industry

ESG sanitary valves are widely used in Pharmaceutical, Food & Beverage, Sterilization, Bio-fermentation,Daily Chemical and other sanitary industries.


















ESG industrial grade valves are widely used in applications:

- Industrial laundry
- Filling operation
- Textile dyeing
- Pneumatic conveying
- Rubber processing
- EPS molding
- Automobile
- Air Separation
- Ultrasonic cleansing

ESG®

ESG works with global customers to deliver innovative technology and optimized solution to flow industry

Our Clients

ESG has served for more than **4000** customers in **80** countries.

Product Catalog

ESG®

Diaphragm Valve

Diaphragm valves are widely used in pharmaceutical, beverage, food, and chemical industry, due to its large flux and low residue, ensuring safety and reliability. The diaphragm meets safety standards set by FDA and USP for pharmaceutical and food industries, and satisfies various requirements and demands of end users. ESG never ceases to adapt to the ever–changing market demand with high–quality products.

Application Industry

Pharmaceutical, food and beverages, cosmetics, brewing, chemicals, etc.




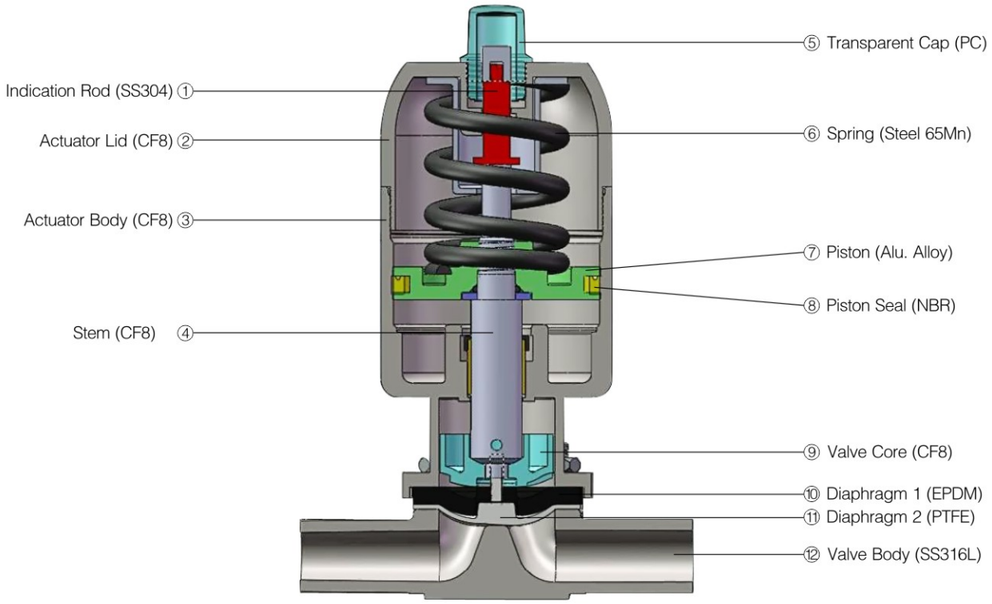

Technical Specification

- Material: (Body) SS316L Investment casting CF3M, Forge SS316L
  (Pneumatic) Actuator + Valve seat CF8; (Manual) Valve seat CF8
- Internal surface: Ra≤0.4μm, mechanically polished
- Diaphragm material: EPDM + PTFE (double–layer diaphragm),
  EPDM (Single–layer diaphragm)
- Operating pressure: 0–10bar (0–145psi)
- Fluid temperature: –10℃ — +150℃
- Control pressure(pneumatic): 4.5–7bar (65–102psi)

Installation Angle

Size	Installation angle	
	A	B
DN08	38.2°	51.8°
DN10	33.6°	56.4°
DN15	22.2°	67.8°
DN20	26.5°	63.5°
DN25	29.9°	60.1°
DN40	27.2°	62.8°
DN50	30.1°	59.9°
DN65	78.0°	12.0°

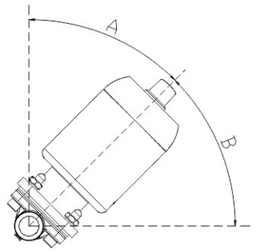

Typical Applications

Fermentation tank, Preparation vessel, Filling machine, Sterilizing equipment, Aseptic fluid transfer, CIP/SIP, etc.




ESG®

Diaphragm Valve

Advantages

01 Patented stem structure with double guiding rings ensures more stable operation.

02 Patented spring seat design allows effortless maintenance .

03 Patented design allows valve stem and core to connect via internal concave surface and thereby ensures tight sealing.

04 Can be installed at any pipe location. Medium flow direction does not affect valve opening/closing.

05 The sealing diaphragm is independently developed and pressurized by PTFE powder

06 ESG diaphragms have passed FDA and USP certifications; ESG diaphragm valves have passed EU EC1935-2004 certifications

Advantages

Double Layer

PTFE(+EPDM support layer) split diaphragm is the highest standard used in the industry, PTFE diaphragms are developed and manufactured by ESG group. High quality raw materials sourced globally to allow our diaphragm product achieves high density, high smoothness, high bending degree. And due to good resistance to high temperature, our diaphragm meets the technological requirement of the SIP sterilization. Diaphragms are widely used in biological, pharmaceutical, vaccines, injection and aseptic production, fermentation, injection of water supply and distribution class field.

The EPDM support piece on the split diaphragm protects the PTFE diaphragm in contact with the product, also strengthen the sealing effect of PTFE diaphragm. PTFE diaphragm with EPDM support piece can be used together to achieve reliability and prolong the service life.

PTFE is suitable for high chemical properties, corrosive chemicals storage and pipeline transportation with excellent chemical impedance and thermal resistance, alkaline solution and concentrated acid compatibility.

Single Layer

EPDM single diaphragm is suitable for hot/cold water, alkaline and weak acid medium and vacuum condition, especially for polar material and steam medium. Ideal for sterilizing application.

EPDM diaphragms are not recommended for use in media such as mineral and vegetable oils, vegetable and animal fats, aliphatic or aromatic hydrocarbons, halogenated solvents or concentrated acids that will cause diaphragm damage like leakage problem.

Diaphragm Introduction

*** Diaphragms can be ordered separately.**

	Working temperature
Single layer <EPDM>	-10℃—150℃
Double layer <EPDM+PTFE>	

Diaphragm certificate

● EC 1935 / FDA(Food and Drug Administration) Certificate / USP(US Pharmacopeia) Certificate / ATEX anti-explosion certificate

Quality Control

1. Valve assembly inspection:
   100% inspection according to the shipping inspection form.
2. Diaphragm valve seal test:
   100% valve assembly seal test, tested according to DIN EN 12266-1.
3. Inner surface finish:
   100% IPQC (in-process control), roughness sampling test according to GB2828.
4. Contact surface inspection:
   Material testing – Spectrum analyzer; Dimension inspection – Three Coordinate Measuring Machine.
5. Qualification:
   Quality Management System IS09001, Food Contact Raw Materials and Products Directive EC1935-2004, Explosion-proof Safety ATEX Directive 2014/34/EU.

Roughness tester

Spectromax meter

Three-coordinate measurement machine

Diaphragm valve

ESG®

Diaphragm Valve

A00 Series
Welded Pneumatic
Diaphragm Valve

A00 Series
Tri-Clamp Pneumatic
Diaphragm Valve

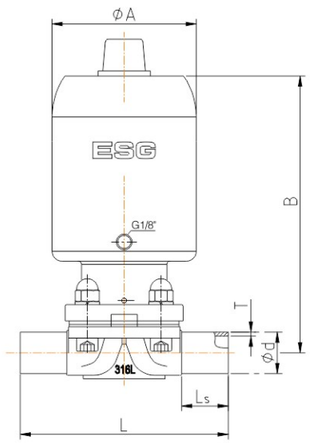

Welded connection

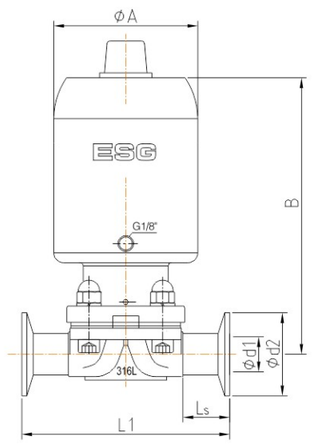

Tri-clamp connection

Main Dimension

Pneumatic diaphragm valve –Welded connection							ASME-BPE	SMS3008	JIS-G3447	ISO-1127	DIN-11850				DIN-11866	
											-0	-1	-2	-3	A	B
Size	Diaphragm	Actuator	ΦA	B	Ls	L	Φd×T	Φd×T	Φd×T	Φd×T	Φd×T	Φd×T	Φd×T	Φd×T	Φd×T	Φd×T
DN8	8	42	47	85	20	72	6.35×0.89	–	–	–	–	–	–	–	–	–
DN10	8	42	47	85	20	72	9.53×0.89	–	–	–	–	–	–	–	–	–
DN15	8	50	57	106	17	72	12.70×1.65	–	–	–	–	–	–	–	–	–
	10	57	65	134	29.5	108	–	–	–	21.3×1.6	18×1.5	18×1.0	19×1.5	20×2	19×1.5	21.3×1.6
DN20	10	57	65	134	29.5	108	19.05×1.65	–	–	–	–	–	–	–	–	–
	25	80	88	170	26.5	120	–	–	–	26.9×1.6	22×1.5	22×1.0	23×1.5	24×2	23×1.5	26.9×1.6
DN25	25	80	88	170	26.5	120	25.4×1.65	25.0×1.2	25.4×1.2	33.7×2	28×1.5	28×1.0	29×1.5	30×2	29×1.5	33.7×2
DN40	40	105	109	196	30	153	38.1×1.65	38.0×1.2	38.1×1.2	48.3×2	40×1.5	40×1.0	41×1.5	42×2	41×1.5	48.3×2
DN50	50	125	129	226	30.5	173	50.8×1.65	51.0×1.2	50.8×1.5	60.3×2	52×1.5	52×1.0	53×1.5	54×2	53×1.5	60.3×2
DN65	50	125	129	232	30.5	173	63.5×1.65	–	–	–	–	–	–	–	–	–

Pneumatic diaphragm valve –Tri-clamp connection					ASME-BPE				ASME-BPE EN558-1 Series 7				SMS3008				JIS-G3447				ISO-1127				DIN-11850			
Size	Diaphragm	Actuator	ΦA	B	Φd1	Φd2	Ls	L1	Φd1	Φd2	Ls	L1	Φd1	Φd2	Ls	L1	Φd1	Φd2	Ls	L1	Φd1	Φd2	Ls	L1	Φd1	Φd2	Ls	L1
DN8	8	42	47	85	4.57	25	15.5	63.5	–	–	–	–	–	–	–	–	–	–	–	–	–	–	–	–	–	–	–	–
DN10	8	42	47	85	7.75	25	15.5	63.5	–	–	–	–	–	–	–	–	–	–	–	–	–	–	–	–	–	–	–	–
DN15	8	50	57	106	9.4	25	15.5	63.5	9.4	25	35	108	–	–	–	–	–	–	–	–	–	–	–	–	–	–	–	–
	10	57	65	134	–	–	–	–	–	–	–	–	–	–	–	–	–	–	–	–	18.1	50.5	29.5	108	16.0	34	29.5	108
DN20	10	57	65	134	15.75	25	26.3	101.6	15.75	25	34	117	15.75	25	34	117	–	–	–	–	–	–	–	–	–	–	–	–
	25	80	88	170	–	–	–	–	–	–	–	–	–	–	–	–	–	–	–	–	23.7	50.5	25	117	20.0	34	25	117
DN25	25	80	88	170	22.1	50.5	23.5	114.3	22.1	50.5	30	127	22.6	50.5	30	127	23	50.5	30	127	29.7	50.5	30	127	26.0	50.5	30	127
DN40	40	105	109	196	34.8	50.5	23	139.7	34.8	50.5	33	159	35.6	50.5	33	159	35.7	50.5	33	159	44.3	64	33.5	159	38.0	50.5	33.5	159
DN50	50	125	129	226	47.5	64	23	158.8	47.5	64	39	190	48.6	64	39	190	47.8	64	39	190	56.3	77.5	39	190	50.0	64	39	190
DN65	50	125	129	232	60.2	77.5	39	190	–	–	–	–	–	–	–	–	–	–	–	–	–	–	–	–	–	–	–	–

Other specifications available for customization.

Order Instruction

A00 XXX X XXX XX X X X X (*)

- Series No.: A00
- Diaphragm size: M08、M10、M25、M40、M50
- Control type: 0: Normally open; 1: Single acting normally closed
- Size: D08、D10、D15、D20、D25、D40、D50、D65
- Connection type:
  - H1: Welded ASME-BPE
  - H2: Welded SMS3008
  - H3: Welded JIS-G3447
  - H4: Welded ISO1127/DIN11866 B
  - H5: Welded DIN11850-0
  - H6: Welded DIN11850-1
  - H7: Welded DIN11850-2/DIN11866 A
  - H8: Welded DIN11850-3
  - K1: Tri-clamp ASME-BPE
  - K2: Tri-clamp SMS3008
  - K3: Tri-clamp JIS-G3447
  - K4: Tri-clamp ISO1127
  - K5: Tri-clamp DIN11850
  - K6: Tri-clamp ASME-BPE EN558-1
- Body material: 6: 316L
- Actuator material: 304
- Diaphragm material:
  - A: PTFE+EPDM (Double-layer diaphragm)
  - B: EPDM (Single-layer diaphragm)
- Polishing:
  - 1: Mechanical polishing <=0.4 μm
  - 2: Electropolishing
- Special customization

ESG®

Diaphragm Valve

A01 Series
Welded Manual
Diaphragm Valve

A01 Series
Tri-clamp Manual
Diaphragm Valve

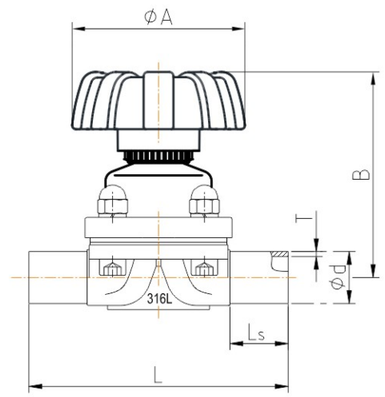

Welded connection

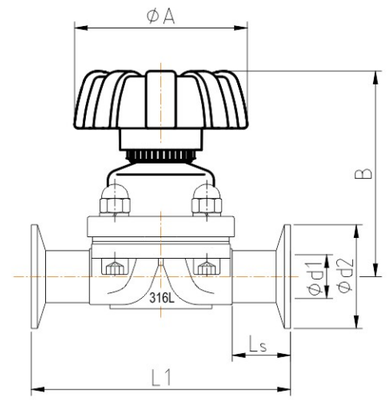

Tri-clamp connection

Main Dimension

Manual diaphragm valve –Weld connection						ASME–BPE	SMS3008	JIS–G3447	ISO–1127	DIN–11850				DIN–11866	
										–0	–1	–2	–3	A	B
Size	Diaphragm	ΦA	B	Ls	L	Φd × T	Φd × T	Φd × T	Φd × T	Φd × T	Φd × T	Φd × T	Φd × T	Φd × T	Φd × T
DN8	8	40	64	20	72	6.35 × 0.89	–	–	–	–	–	–	–	–	–
DN10	8	40	64	20	72	9.53 × 0.89	–	–	–	–	–	–	–	–	–
DN15	8	50	64	20	72	12.70 × 1.65	–	–	–	–	–	–	–	–	–
	10	65	85	29.5	108	–	–	–	21.3 × 1.6	18 × 1.5	18 × 1.0	19 × 1.5	20 × 2	19 × 1.5	21.3 × 1.6
DN20	10	65	85	29.5	108	19.05 × 1.65	–	–	–	–	–	–	–	–	–
	25	85	102	26.5	120	–	–	–	26.9 × 1.6	22 × 1.5	22 × 1.0	23 × 1.5	24 × 2	23 × 1.5	26.9 × 1.6
DN25	25	85	102	26.5	120	25.4 × 1.65	25.0 × 1.2	25.4 × 1.2	33.7 × 2	28 × 1.5	28 × 1.0	29 × 1.5	30 × 2	29 × 1.5	33.7 × 2
DN40	40	105	115	30	153	38.1 × 1.65	38.0 × 1.2	38.1 × 1.2	48.3 × 2	40 × 1.5	40 × 1.0	41 × 1.5	43 × 2	41 × 1.5	48.3 × 2
DN50	50	125	133	30.5	173	50.8 × 1.65	51.0 × 1.2	50.8 × 1.5	60.3 × 2	52 × 1.5	52 × 1.0	53 × 1.5	54 × 2	53 × 1.5	60.3 × 2
DN65	50	125	139	30.5	173	63.5 × 1.65	–	–	–	–	–	–	–	–	–

Manual diaphragm valve –Tri–clamp connection				ASME-BPE				ASME-BPE EN558-1 Series 7				SMS3008				JIS-G3447				ISO-1127				DIN-11850			
Size	Diaphragm	ΦA	B	Φd1	Φd2	Ls	L1	Φd1	Φd2	Ls	L1	Φd1	Φd2	Ls	L1	Φd1	Φd2	Ls	L1	Φd1	Φd2	Ls	L1	Φd1	Φd2	Ls	L1
DN8	8	40	64	4.57	25	15.5	63.5	–	–	–	–	–	–	–	–	–	–	–	–	–	–	–	–	–	–	–	–
DN10	8	40	64	7.75	25	15.5	63.5	–	–	–	–	–	–	–	–	–	–	–	–	–	–	–	–	–	–	–	–
DN15	8	50	64	9.4	25	15.5	63.5	9.4	25	35	108	–	–	–	–	–	–	–	–	–	–	–	–	–	–	–	–
	10	65	85	–	–	–	–	–	–	–	–	–	–	–	–	–	–	–	–	18.1	50.5	29.5	108	16.0	34	29.5	108
DN20	10	65	85	15.75	25	26.3	101.6	15.75	25	34	117	15.75	25	34	117	–	–	–	–	–	–	–	–	–	–	–	–
	25	85	102	–	–	–	–	–	–	–	–	–	–	–	–	–	–	–	–	23.7	50.5	25	117	20.0	34	25	117
DN25	25	85	102	22.1	50.5	23.5	114.3	22.1	50.5	30	127	22.6	50.5	30	127	23	50.5	30	127	29.7	50.5	30	127	26.0	50.5	30	127
DN40	40	105	115	34.8	50.5	23	139.7	34.8	50.5	33	159	35.6	50.5	33	159	35.7	50.5	33	159	44.3	64	33.5	159	38.0	50.5	33.5	159
DN50	50	125	133	47.5	64	23	158.8	47.5	64	39	190	48.6	64	39	190	47.8	64	39	190	56.3	77.5	39	190	50.0	64	39	190
DN65	50	125	139	60.2	77.5	39	190	–	–	–	–	–	–	–	–	–	–	–	–	–	–	–	–	–	–	–	–

Other specifications available for customization.

Order Instruction

A01 XXX XXX XX X X X (*)

- Series No. — A01
- Diaphragm size — M08、M10、M25、M40、M50
- Size — D08、D10、D15、D20、D25、D40、D50、D65
- Connection type
  - H1: Welded ASME–BPE
  - H2: Welded SMS3008
  - H3: Welded JIS–G3447
  - H4: Welded ISO1127/DIN11866 B
  - H5: Welded DIN11850–0
  - H6: Welded DIN11850–1
  - H7: Welded DIN11850–2/DIN11866 A
  - H8: Welded DIN11850–3
  - K1: Tri–clamp ASME–BPE
  - K2: Tri–clamp SMS3008
  - K3: Tri–clamp JIS–G3447
  - K4: Tri–clamp ISO1127
  - K5: Tri–clamp DIN11850
  - K6: Tri–clamp ASME–BPE EN558–1
- Body material — 6: 316L
- Diaphragm material
  - A: PTFE+EPDM (Double–layer diaphragm)
  - B: EPDM (Single–layer diaphragm)
- Polishing
  - 1: Mechanical polishing <=0.4 μm
  - 2: Electropolishing
- Special customization — (*)

ESG®

Proportional Diaphragm Valve

A02 Series
Proportional Control
Angle Seat Valve

Technical Specification

- Voltage: 24V DC
- Power: <10W
- Input signal: 0/4–20mA, 0–5/10V
- Output signal: 0/4–20mA, 0–5/10V
- Enclosure material: PA6–GF30+PC
- Control pressure: 4.5–7bar (65–102psi)
- Ambient temperature: 0–60℃
- Protection level: IP65
- Explosion–proof: Ex nA IIC T4

Function Principle

Intelligent positioner is a microprocessor–based valve regulator. The valve's open/close state is controlled by external input signals. It is widely used in industrial fluids control systems in order to enable remote and automated control.

Advantages

1. Compact size to save space.
2. Reliable performance and sensitive reaction.
3. Large LCD display makes it easy to operate.
4. Standard electrical interface allows convenient wiring.
5. High adjustment precision and strong anti–interference performance.
6. Spring–loaded feedback rod for easy installation.
7. Allows various types of connection interface.

Interface Definition

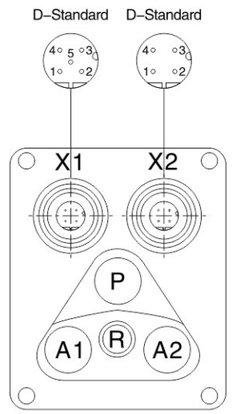

Electrical Terminal

Port Label	Terminal #	Description	Signal Type
X1	1	Analog signal output +	0/4–20mA or 0–5/10V
	2	Analog signal output –	GND
	3	Improper position alarm output	High level (display:UN–ADJ)
	4	Safe position trigger input	High level
	5	Signal common GND	GND
X2	1	Power +	+24V
	2	Power GND	GND
	3	Set signal input +	0/4–20mA or 0–5/10V
	4	Set signal input to GND	GND

Pneumatic Terminal

Port Label	Description
P	Air input
A1	Pilot port 1
A2	Pilot port 2
R	Exhaust port

Order Instruction

A02 XXX X XXX XX X X X X (*)

- Series No. — A02
- Diaphragm size — M08、M10、M25、M40、M50
- Control type — 0: Normally open; 1: Single acting normally closed
- Size — D15、D20、D25、D40、D50、D65
- Connection type —
  - H1: Welded ASME–BPE
  - H2: Welded SMS3008
  - H3: Welded JIS–G3447
  - H4: Welded ISO1127/DIN11866 B
  - H5: Welded DIN11850–0
  - H6: Welded DIN11850–1
  - H7: Welded DIN11850–2/DIN11866 A
  - H8: Welded DIN11850–3
  - K1: Tri–clamp ASME–BPE
  - K2: Tri–clamp SMS3008
  - K3: Tri–clamp JIS–G3447
  - K4: Tri–clamp ISO1127
  - K5: Tri–clamp DIN11850
  - K6: Tri–clamp ASME–BPE EN558–1
- Body material — 6: 316L
- Actuator material — 304
- Diaphragm material —
  - A: PTFE+EPDM (Double–layer diaphragm)
  - B: EPDM (Single–layer diaphragm)
- Polishing —
  - 1: Mechanical polishing <=0.4 μm
  - 2: Electropolishing
- Special customization

ESG®

T-Shape Valve

A10 Series
Pneumatic
T-shape Valve

A11 Series
Manual
T-shape Valve

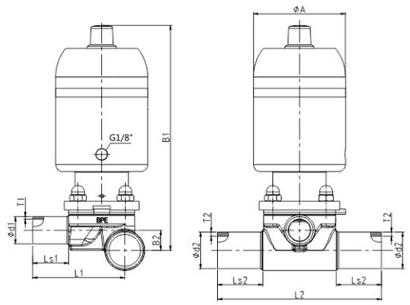

Pneumatic T-shape

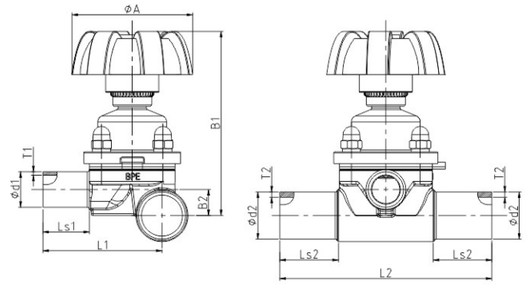

Manual T-shape

Technical Specification

- Material: Investment casting CF3M, Forge SS316L
  (Pneumatic) Actuator+Valve seat CF8;
  (Manual) Valve seat CF8
- Internal Surface: Ra≤0.4μm mechanically polished
- Diaphragm Material: EPDM+PTFE (Double-layer diaphragm)
  EPDM (Single-layer diaphragm)
- Operating Pressure: 0-10bar (0-145psi)
- Fluid Temperature: -10 to +150℃
- Control Pressure(pneumatic): 4.5-7bar (65-102psi)

Advantages

1. Compact structure to minimize installation space.
2. No dead angle and auto emptying can be achieved based on the installation position.
3. Applicable to CIP/SIP process to actualize high temperature disinfection.
4. Manual and pneumatic operation is optional.

Function Principle

The T-shape valve body is welded to the annular lines of liquid or pure water system. Through this technical method, it can achieve the best effect of sampling or usage of water seamlessly. In addition, based on the requirement of the process, the technology is able to mix two kinds of working mediums. Most importantly, the seal ridge of the T-shape valve has to be as close to the main pipe as possible.

Order Instruction

A10 XXX X XXX XXX XX X X X X (*)

- Series No.
- Diaphragm size: M08、M10、M25、M40、M50
- Control type: 0: Normally open; 1: Single acting normally closed
- Size (Main line) D25、D40
- Size (Sub line) D15、D20、D25、D40
- Connection type: H1: Welded ASME-BPE
- Body material: 6: 316L
- Actuator material: 304
- Diaphragm material: A: PTFE+EPDM (Double layer); B: EPDM (Single layer)
- Polishing: 1: Mechanical polishing <=0.4 μm; 2: Electropolishing
- Special customization

Main Dimension

Pneumatic T-shape Valve — Welded Connection										ASME-BPE	
Size	Diaphragm	Actuator	ΦA	B1	B2	Ls1	Ls2	L1	L2	Φd1 X T1	Φd2 X T2
25-15	8	50	57	140	14.9	20	33	51	103	12.7 X 1.65	25.4 X 1.65
25-20	10	57	65	165	14	25	31	64	114	19.05 X 1.65	25.4 X 1.65
25-25	25	80	88	205	13.3	25	25.25	76	124.5	25.4 X 1.65	25.4 X 1.65
40-25	25	80	88	215	20	25	25.29	82	124.5	25.4 X 1.65	38.1 X 1.65
40-40	40	105	109	235	13.75	25	27	97.5	152	38.1 X 1.65	38.1 X 1.65

Manual T-shape Valve — Welded Connection									ASME-BPE	
Size	Diaphragm	ΦA	B1	B2	Ls1	Ls2	L1	L2	Φd1 X T1	Φd2 X T2
25-15	8	50	80	14.9	20	33	51	103	12.7 X 1.65	25.4 X 1.65
25-20	10	65	100	14	25	31	64	114	19.05 X 1.65	25.4 X 1.65
25-25	25	85	115	13.3	25	25.25	76	124.5	25.4 X 1.65	25.4 X 1.65
40-25	25	85	125	20	25	25.29	82	124.5	25.4 X 1.65	38.1 X 1.65
40-40	40	105	130	13.75	25	27	97.5	152	38.1 X 1.65	38.1 X 1.65

Order Instruction

A11 XXX XXX XXX XX X X X (*)

- Series No.
- Diaphragm size: M08、M10、M25、M40、M50
- Size (Main line) D25、D40
- Size (Sub line) D15、D20、D25、D40
- Connection type: H1: Welded ASME-BPE
- Body material: 6: 316L
- Diaphragm material: A: PTFE+EPDM (Double layer); B: EPDM (Single layer)
- Polishing: 1: Mechanical polishing <=0.4 μm; 2: Electropolishing
- Special customization

ESG®

Tank Bottom Valve

A20 Series
Pneumatic Tank
Bottom Diaphragm

A21 Series
Manual Tank
Bottom Diaphragm

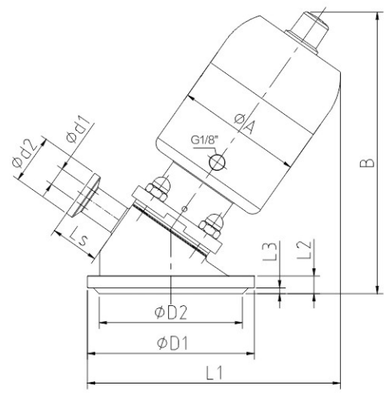

Pneumatic Tank
Bottom Diaphragm

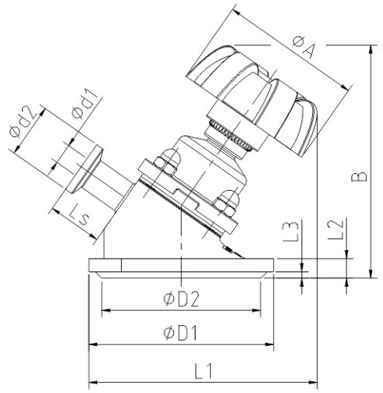

Manual Tank
Bottom Diaphragm

Technical Specification

- Material: Investment casting CF3M, Forge SS316L
  (Pneumatic) Actuator+Valve seat CF8;
  (Manual) Valve seat CF8
- Internal Surface: Ra≤0.4 μ m mechanically polished
- Diaphragm Material: EPDM+PTFE (Double–layer diaphragm)
  EPDM (Single–layer diaphragm)
- Operating Pressure: 0–10bar (0–145psi)
- Fluid Temperature: –10 to +150℃
- Control Pressure(pneumatic): 4.5–7bar (65–102psi)

Advantages

1. Compact structure, can ensure installation in a small space.
2. Automatic emptying without dead angle.
3. The valve body is integrally cast (structure without welding). It is Suitable for process control and can be sterilized at high temperature.
4. Optional manual and pneumatic operation.

Function Principle

The bottom valve of the tank is welded to the bottom of the container to achieve the best effect of emptying, cleaning and disinfection. In addition, the working medium can be well mixed according to various technological requirements during the operation. The most important thing is that the sealing weir of the tank bottom valve has been close to the tank bottom wall to the greatest extent, so as to achieve the effect of zero dead angle.

Order Instruction

A20 XXX X XXX XX X X X X (*)

- Series No.
- Diaphragm size: M10、M25、M40、M50
- Control type 1: Single acting normally closed
- Size D15、D20、D25、D40、D50
- Connection type K1: Tri–clamp ASME–BPE
- Body material 6: 316L
- Actuator material 304
- Diaphragm material: A: PTFE+EPDM (Double layer); B: EPDM (Single layer)
- Polishing: 1: Mechanical polishing <=0.4 μm; 2: Electropolishing
- Special customization

Pneumatic Tank Bottom Diaphragm Main Dimension

Size	Diaphragm	ΦA	B	ΦD1	ΦD2	Φd1	Φd2	L1	L2	L3	Ls
DN15	10	65	145	85	73	9.4	25	130	12	3	25
DN20	10	65	145	85	73	15.75	25	130	12	3	25
DN25	25	88	195	120	108	22.1	50.5	178	16	3	30
DN40	40	109	220	150	138	34.8	50.5	210	18	3	35
DN50	50	129	255	180	168	47.5	64	240	22	3	35

Manual Tank Bottom Diaphragm Main Dimension

Size	Diaphragm	ΦA	B	ΦD1	ΦD2	Φd1	Φd2	L1	L2	L3	Ls
DN15	10	65	110	85	73	9.4	25	105	12	3	25
DN20	10	65	110	85	73	15.75	25	105	12	3	25
DN25	25	85	135	120	108	22.1	50.5	138	16	3	30
DN40	40	105	155	150	138	34.8	50.5	165	18	3	35
DN50	50	125	180	180	168	47.5	64	195	22	3	35

Order Instruction

A21 XXX XXX XX X X X (*)

- Series No.
- Diaphragm size: M10、M25、M40、M50
- Size D15、D20、D25、D40、D50
- Connection type K1: Tri–clamp ASME–BPE
- Body material 6: 316L
- Diaphragm material: A: PTFE+EPDM (Double layer); B: EPDM (Single layer)
- Polishing: 1: Mechanical polishing <=0.4 μm; 2: Electropolishing
- Special customization

ESG®

Sampling Valve

A31 Series
Single Port Manual
Sampling Valve

Welded connection

Clamp Connection

A31 Series
Dual-Port Manual Aseptic
Sampling Valve

Welded Connection

Clamp Connection

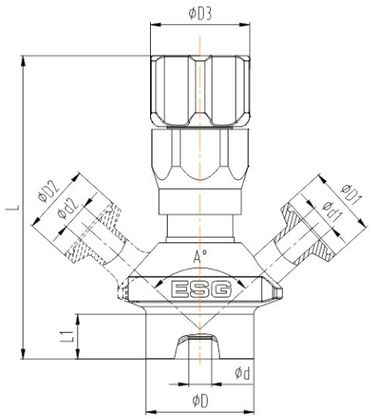

Welded Connection

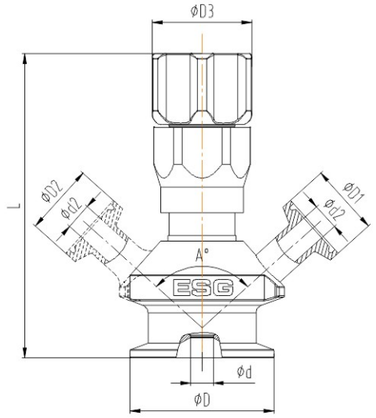

Clamp Connection

Technical Specification

- Valve Body Material: AISI 316L
- Internal Surface: Mechanical Polishing Ra≤0.4 μ m; Electropolishing
- Connecton type: Welded Connection, Clamp Connection
- Nominal Pressure: PN16
- Control Type: Manual
- Connection Type: ASME–BPE Welded, ASME–BPE Clamp
- Diaphragm Material: PTFE
- Operating Pressure: 0–1.0Mpa
- Fluid Temperature: –10 to 150℃
- Structure: Single Port, Dual–Port

Advantages

1. Valve diaphragm is certified with FDA and USP.
2. Valve bodies with ports are machined in one piece of forging steel, thus avoiding all crevices and fissures from welded or screwed parts.
3. Valve bodies come with welded or clamp connection, customization is acceptable.
4. Sanitary seal has good resistance to high pressure, excellent corrosion resistance and is of long service life.
5. Spring–preloading structure strengthens sealing effect and prolong the valve seat service life.

Order Instruction

A31 XXX X XXX X X X (*)

- Series No. — A31
- Connection — K12: Clamp ϕ 50.5 ASME–BPE; H12: Welded ϕ 38 ASME–BPE
- Structure — 1. Single Port; 2. Dual–Port
- Port K21: Clamp ϕ 25 ASME–BPE
- Body material 6: 316L
- Diaphragm material 1: PTFE
- Polishing — 1. Mechanical Polishing ≤0.4 μ m; 2. Electropolishing
- Special Customization

Main Dimension(Clamp Connection)

Size	ΦD	Φd	L	ΦD1	Φd1	ΦD2	Φd2	ΦD3	A°
Single Port	50.5	8	110	25	9.4	–	–	38	96
Dual–Port	50.5	8	110	25	9.4	25	9.4	38	96

Size customization available.

Main Dimension(Welded Connection)

Size	ΦD	Φd	L	L1	ΦD1	Φd1	ΦD2	Φd2	ΦD3	A°
Single Port	38	8	110	15.5	25	9.4	–	–	38	96
Dual–Port	38	8	110	15.5	25	9.4	25	9.4	38	96

Size customization available.

ESG®

Multi-port Valve Block

A4 Series
I – bodies

Description

ESG I – bodies is a stainless steel valve block that comprises two diaphragm valve seats. It combines functions in the smallest of spaces in one block and provides junction points within plants. ESG I – bodies is produced from a single block of material, no internal welds and fewer fittings, leading to a reduction in potential leakage points.

Features

1. Space savings due to compact design.
2. Minimal dead spaces, low hold–up volume of media and reduces media consumption.
3. Integration of valves and control systems shorter installation times.
4. Compact valve solution lowers the cost.
5. Optimized design for draining.
6. Free to choose between manual and pneumatic actuator versions.

A6 Series
M - bodies

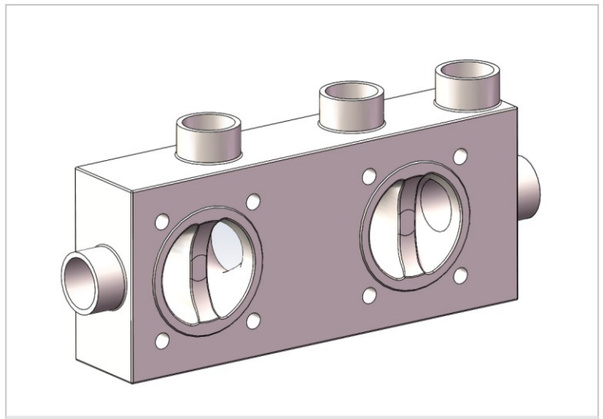

4W3P M–bodies

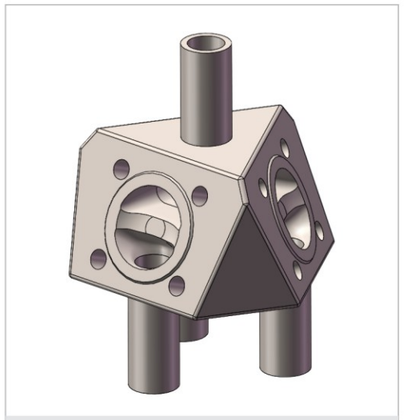

5W3P M–bodies

Overview

ESG M–bodies is a stainless steel multi–port valve block and provides a multi–functional solution for blending, diverting, draining or feeding demanding media in the pharmaceutical industry, biotechnology industry and the food industry.

Features

1. Individual, customized and flexible design.
2. Produced from a single block of material, no internal welds, fewer fittings and fewer welds, reduce potential leakage points.
3. Extremely compact valve solution.
4. Minimal dead spaces.
5. Optimized design for draining.
6. Lower installation time, simplified commissioning and maintenance.
7. Free to choose between manual and pneumatic actuator versions.

ESG®

Combination Valve

A50 series
Combination
Diaphragm Valve

GMP1

GMP2

GMP3

GMP4

GMP5

GMP6

GMP7

GMP8

GMPA

GMPB

Description

In order to take into account the manufacturing cost under the premise of meeting client's requirement during cleaning process, sterilization process and self discharge abilities, ESG has specifically arranged the layout of the valve so to provide the most suitable scheme for our client.

GMP combination valve is formed via two two–way diaphragm valve or one two–way with tri–clamp chuck through the welding.
ESG has designed 10 types of combination for our clients to choose, and can also be customised according to requirements.

Order Instruction

XXX XXXX Main Sub X X (*)

- Series No. A50: Combination diaphragm valve
- Combination type: GMP1、GMP2、GMP3、GMP4、GMP5、GMP6、GMP7、GMP8、GMPA、GMPB
- Polishing: 1: Mechanical polishing <=0.4 μm; 2: Electropolishing
- Body material: 6: 316L Casting; D: 316L Forging
- Special customization

XXX X X XXX XX X

- Series No. A00 A01
- Actuator Material: B: 304; B: 304(D08、D10、D15 Optional); E: Engineering–plastics
- Control type: 1: Single acting normally closed; 0: Normally open; 8: No acting form (manual slection)
- Size: D15、D20、D25、D40、D50、 D65
- Connection type: H1、H2、H3、H4、H5、H6、H7、H8、K1、K2、K3、K4、K5、K6
- Diaphragm material: A: PTFE+EPDM (Double–layer diaphragm); B: EPDM (Single–layer diaphragm)

XXX X X XXX XX X

- Series No. A00 A01; K01 Tri–Clamp – Customised
- Actuator Material: B: 304; B: 304(D08、D10、D15 Optional); E: Engineering–plastics; 0: None
- Control type: 1: Single acting normally closed; 0: Normally open; 8: No acting form (manual slection); 8: No acting form
- Size D08、D10、D15
- Connection type: H1: (**)customised; K1: (**)customised
- Diaphragm material: A: PTFE+EPDM (Double–layer diaphragm); B: EPDM (Single–layer diaphragm); 0: None

ESG®

Combination Valve

A52 series
Combination Bottom
Tank Valve

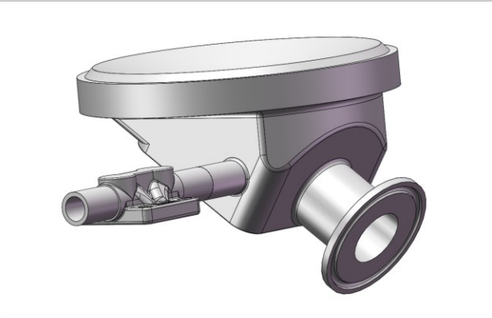

SH1

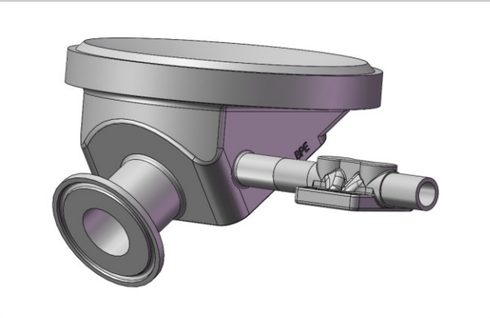

SH2

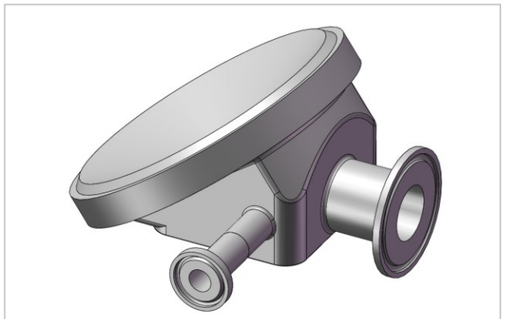

SHA

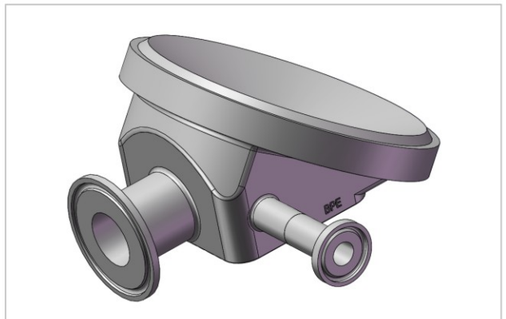

SHB

Description

In order to take into account the manufacturing cost under the premise of meeting client's requirement during cleaning process, sterilization process and self discharge abilities, ESG has specifically arranged the layout of the valve so to provide the most suitable scheme for our client.

Bottom tank valve can be equipped with CIP/SIP interface at the rear of the valve body, the interface can be optionally chucked or welded to connect the pipe or the valve body. ESG can combine both tank bottom valve and two-way diaphragm valve, or reserve the side wall of the bottom tank valve for welding and chuck interfaces for CIP/SIP process. The following combinations is available and combinations can be customized according to requirements.

Order Instruction

XXX XXX Main Sub X X (*)

- Series No. A52 Combination Bottom Tank Valve
- Combination type: SH1、SH2、SHA、SHB
- Polishing: 1: Mechanical polishing <=0.4 μm; 2: Electropolishing
- Body material: 6: CF3M Casting; D: 316L Forging
- Special customization

XXX X X XXX XX X

- Series No. A20 A21
- Actuator Material: B: 304; B: 304(D08、D10、D15 Optional); E: Engineering-plastics
- Control type: 1: Pneumatic-Single acting normally closed; 8: Manual
- Diaphragm material: A: PTFE+EPDM (Double-layer diaphragm); B: EPDM (Single-layer diaphragm)
- Connection type K1
- Size: D15、D20、D25、D40、D50

XXX X X XXX XX X

- Series No. A00 A01 K01 Tri-Clamp – Customised
- Actuator Material: B: 304; B: 304(D08、D10、D15 Optional); E: Engineering-plastics; 0: None
- Control type: 1: Single acting normally closed; 0: Normally open; 8: No acting form (manual slection); 8: No acting form
- Diaphragm material: A: PTFE+EPDM (Double-layer diaphragm); B: EPDM (Single-layer diaphragm); 0: None
- Connection type: H1: (**)customised; K1: (**)customised
- Size:
  - Forging body– Sub body < Main body
  - Casting body
    - Main: D15、D20、D25、D40、D50
    - Sub: D08、D10; D08、D10、D15; D08、D10、D15、D20; D08、D10、D15、D20、D25

ESG®

Butterfly Valve

B00 Series
Vertical Pneumatic
Tri–clamp Butterfly Valve

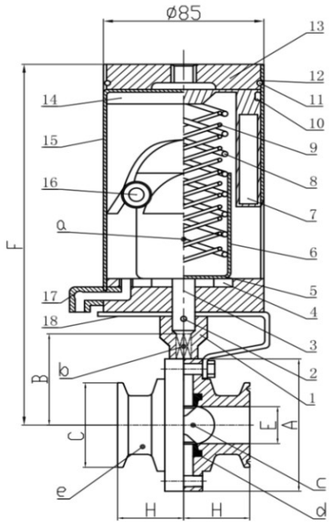

Technical Specification

- Size: 1/2"–4"
- Working pressure: 10bar
- Control pressure: 5–7bar
- Body material: 304/316/316L forging
- Sealing material: EPDM
- Control type: Single acting/Double acting
- Internal surface: Ra0.6–0.8um
- Connection type: Tri–clamp 3A, welded 3A
- Temperature: –20℃~130℃
- Applications: Widely used in food, beverages, brewery, pharmaceuticals industries etc.

Main Dimension (Tri-clamp Connection)

Size	A	B	C	E	H	F
1/2"	79	49.5	25	9.4	35	237
3/4"	79	49.5	25	15.8	35	237
1"	79	49.5	50.5	22.1	35	237
1.5"	85	52.5	50.5	34.8	35	240
2"	100	60	64	47.5	37	246
2.5"	115	67.5	77.5	60.2	38	256
3"	127	73.5	91	72.9	39	256
4"	156	88	119	97.6	45	286

B00 Series
Vertical Pneumatic
Welded Butterfly Valve

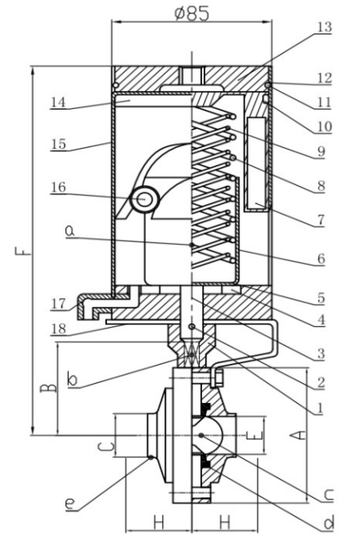

Main Dimension (Welded Connection)

Size	A	B	C	E	H	F
1/2"	79	49.5	12.7	9.4	23	237
3/4"	79	49.5	19.1	15.8	23	237
1"	79	49.5	25.4	22.1	23.5	237
1.5"	85	52.5	38.1	34.8	23.5	240
2"	100	60	50.8	47.5	26	246
2.5"	115	67.5	63.5	60.2	27	256
3"	127	73.5	76.2	72.9	28	256
4"	156	88	101.6	97.6	30	286

Order Instruction

B00 X XXX XX X X X (*) X

- Series No. — B00
- Control type — 4: Single acting; 5: Double acting
- Size — D15、D20、D25、D40、D50、D65、D80、100
- Connection type — K1: Tri–clamp 3A; HA: Welded 3A
- Body material — 3: 304; 4: 316; 6: 316L
- Sealing material — 4: EPDM; *: Customized sealing
- Disc material — 3: 304; 4: 316; 6: 316L
- Special customization
- Accessory

ESG®

Butterfly Valve

B10 Series
Pull Handles Tri-clamp
Manual Butterfly Valve

B10 Series
Pull Handles Welded
Manual Butterfly Valve

Technical Specification

- Size: 1/2"–6"
- Working pressure: 10bar
- Body material: 304/316/316L forging
- Sealing material: EPDM
- Connection type: Tri–clamp 3A, welded 3A
- Internal surface: Ra0.6–0.8um
- Temperature: –20℃~130℃
- Applications: Widely used in food, beverages, brewery, pharmaceuticals industries etc.

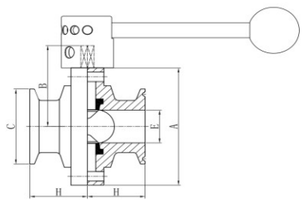

Tri–clamp

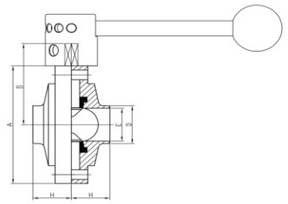

Welded

Main Dimension (Tri-clamp Connection)

Size	A	B	C	E	H
1/2"	79	49.5	25	9.4	35
3/4"	79	49.5	25	15.8	35
1"	79	49.5	50.5	22.1	35
1.25"	79	49.5	50.5	29	35
1.5"	85	52.5	50.5	34.8	35
2"	100	60	64	47.5	37
2.5"	115	67.5	77.5	60.2	38
3"	127	73.5	91	72.9	39
3.5"	140	80	106	85	39
4"	156	88	119	97.6	45
6"	215	117.5	166.8	146.8	63

Main Dimension (Welded Connection)

Size	A	B	D	E	H
1/2"	79	49.5	12.7	9.4	23
3/4"	79	49.5	19.1	15.8	23
1"	79	49.5	25.4	22.1	23.5
1.25"	79	49.5	31.8	28.8	23.5
1.5"	85	52.5	38.1	34.8	23.5
2"	100	60	50.8	47.5	26
2.5"	115	67.5	63.5	59.5	27
3"	127	73.5	76.2	72.2	28
3.5"	140	80	88.9	84.9	29
4"	156	88	101.6	97.6	30

B11 Series
Muti-handles Tri-clamp
Manual Butterfly Valve

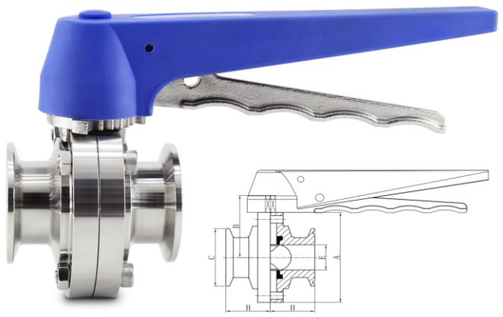

B11 Series
Muti-handles Welded
Manual Butterfly Valve

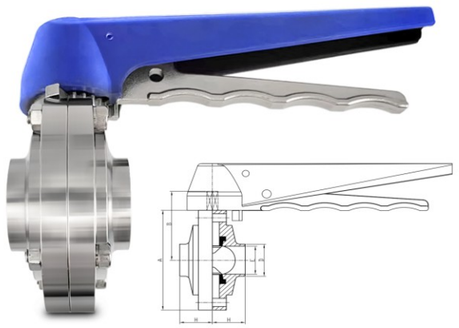

Main Dimension (Tri-clamp Connection)

Size	A	B	C	E	H
1/2"	79	49.5	25	9.4	35
3/4"	79	49.5	25	15.8	35
1"	79	49.5	50.5	22.1	35
1.25"	79	49.5	50.5	29	35
1.5"	85	52.5	50.5	34.8	35
2"	100	60	64	47.5	37
2.5"	115	67.5	77.5	60.2	38
3"	127	73.5	91	72.9	39
3.5"	140	80	106	85	39
4"	156	88	119	97.6	45

Main Dimension (Welded Connection)

Size	A	B	D	E	H
1/2"	79	49.5	12.7	9.8	23
3/4"	79	49.5	19.1	15.8	23
1"	79	49.5	25.4	22.1	23.5
1.25"	79	49.5	31.8	28.8	23.5
1.5"	85	52.5	38.1	34.8	23.5
2"	100	60	50.8	47.5	26
2.5"	115	67.5	63.5	59.5	27
3"	127	73.5	76.2	72.2	28
3.5"	140	80	88.9	84.9	29
4"	156	88	101.6	97.6	30

Order Instruction

B10/B11 XXX XX X X X (*) X

- Series No.: B10: Pull handles; B11: Muti–handles
- Size: D15、D20、D25、D32、D40、D50、D65、D80、D90、100、150
- Connection type: KA: Tri–clamp 3A; HA: Welded 3A
- Body material: 3: 304; 4: 316; 6: 316L
- Sealing material: 4: EPDM; *: Customized sealing
- Disc material: 3: 304; 4: 316; 6: 316L
- Special customization
- Accessory

ESG®

Ball Valve

C00 Series
3-PC Horizontal Pneumatic
Tri-clamp Ball Valve

Technical Specification

- Size: 1/2"–6"
- Body structrue: Straight and all–inclusive ball seat design
- Working pressure: 10bar
- Control pressure: 5–7bar
- Body material: CF8/CF8M/316L
- Sealing material: PTFE
- Control type: Single acting/Double acting
- Connection type: Tri–clamp 3A, welded 3A
- Internal surface: CNC machining Ra 0.6 μ m
- Temperature: –20℃~150℃
- Applications: Widely used in food, beverages, brewery, pharmaceuticals industries etc.

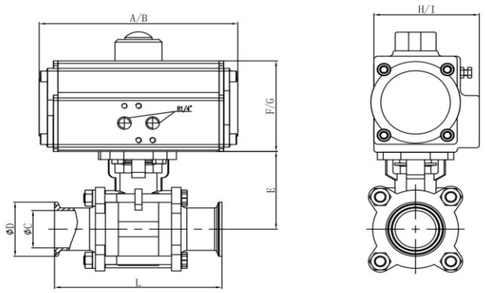

Tri–clamp

Main Dimension (Tri-clamp Connection)

Size	A/B (SA/DA)	C ±0.06	D ±0.06	E ±0.3	F/G (SA/DA)	H/I (SA/DA)	L ±0.3	SA Actuator Size	DA Actuator Size	Torque N.m
1/2"	169/154	9.4	25.2	37	88/72	82/71	90.5	AT52	AT52	4~10
3/4"	169/154	15.75	25.2	43	88/72	82/71	103.4	AT52	AT52	4~10
1"	201/169	22.1	50.5	51	100/88	94/82	114.2	AT75	AT63	5~15
1.25"	201/169	28.5	50.5	61	100/88	94/82	126	AT75	AT63	10~20
1.5"	209/201	34.8	50.5	71	108/100	101/94	136.7	AT83	AT75	10~25
2"	275/209	47.5	64	79	133/108	122/101	153.2	AT105	AT83	15~30
2.5"	275/209	60.2	77.5	94	133/108	122/101	167.3	AT105	AT83	20~35
3"	332/275	72.9	91	109.5	155/133	138/122	192.3	AT125	AT105	40~65
4"	385/332	97.4	119	123	172/155	153/138	239.5	AT140	AT125	40~80
6"	507/450	146.8	166.8	169	230/197	206/174	378	AT190	AT160	60~120

C00 Series
3-PC Horizontal Pneumatic
Welded Ball Valve

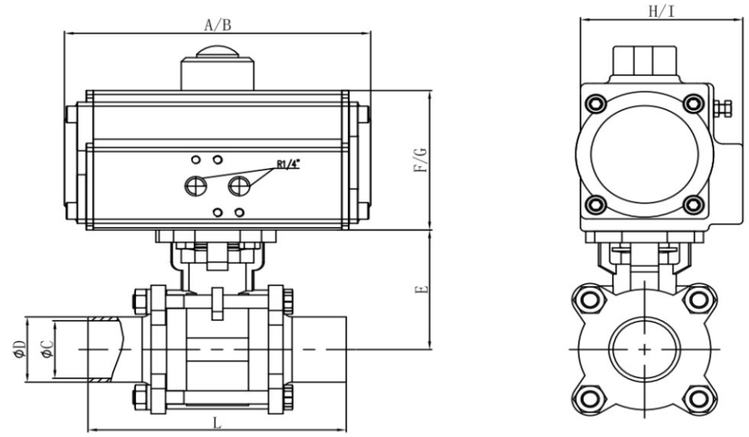

Welded

Main Dimension (Welded Connection)

Size	A/B (SA/DA)	C ±0.06	D ±0.06	E ±0.3	F/G (SA/DA)	H/I (SA/DA)	L ±0.3	SA Actuator Size	DA Actuator Size	Torque N.m
1/2"	169/154	9.4	12.7	37	88/72	82/71	90.5	AT52	AT52	4~10
3/4"	169/154	15.75	19.05	43	88/72	82/71	103.4	AT52	AT52	4~10
1"	201/169	22.1	25.4	51	100/88	94/82	114.2	AT75	AT63	5~15
1.25"	201/169	28.5	31.8	61	100/88	94/82	126	AT75	AT63	10~20
1.5"	209/201	34.8	38.1	71	108/100	101/94	136.7	AT83	AT75	10~25
2"	275/209	47.5	50.8	79	133/108	122/101	153.2	AT105	AT83	15~30
2.5"	275/209	60.2	63.5	94	133/108	122/101	167.3	AT105	AT83	20~35
3"	332/275	72.9	76.2	109.5	155/133	138/122	192.3	AT125	AT105	40~65
4"	385/332	97.4	101.6	123	172/155	153/138	239.5	AT140	AT125	40~80
6"	507/450	146.8	152.4	169	230/197	206/174	378	AT190	AT160	60~120

Order Instruction

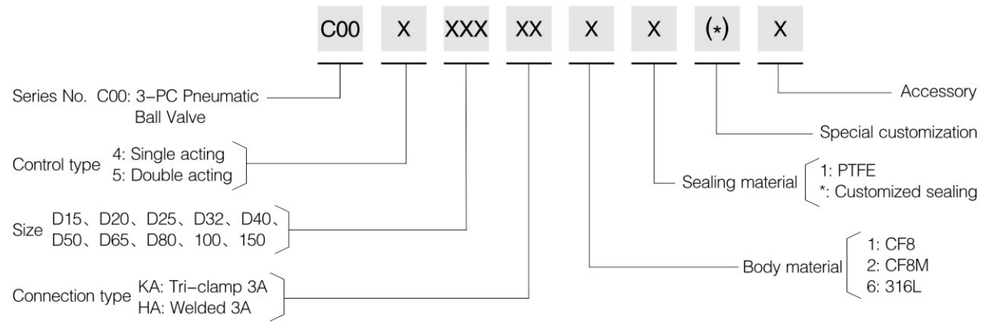

ESG®

Ball Valve

C01 Series
Vertical Pneumatic
Butterfly Ball Valve

Function Principle

- Size: 1/2"–4"
- Body structrue: Forged body with semi–wrapped floating ball structure
- Working pressure: 10bar
- Control pressure: 5–7bar
- Body material: 304/316/316L
- Sealing material: PTFE
- Control type: Single acting/Double acting
- Connection type: Tri–clamp 3A, welded 3A
- Internal surface: CNC machining Ra 0.6 μ m
- Temperature: –20℃~150℃
- Applications: Widely used in food, beverages, brewery, pharmaceuticals industries etc.

Order Instruction

C01 X XXX XX X X (*) X

- Series No. — C01
- Control type — 4: Single acting; 5: Double acting
- Size — D15、D20、D25、D32、D40、D50、D65、D80、100
- Connection type — KA: Tri–clamp 3A; HA: Welded 3A
- Body material — 3: 304; 4: 316; 6: 316L
- Sealing material — 1: PTFE; *: Customized sealing
- Special customization — (*)
- Accessory — X

Ball valve

C01 Series
Vertical Pneumatic
Butterfly Ball Valve

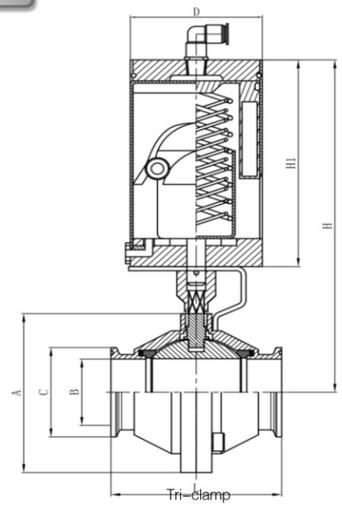

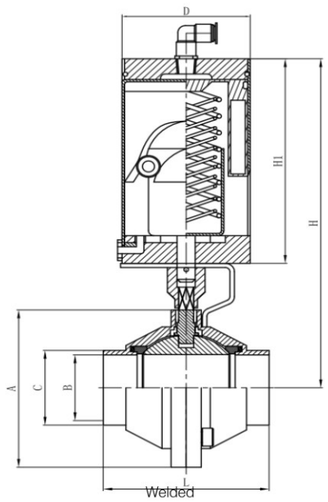

Main Dimension (Tri-clamp Connection)

Size	A ±0.13	B ±0.13	C ±0.13	D ±0.3	L ±0.5	H1 ±2	H ±5
1/2"	64	9.4	25.2	85	70	148	216
3/4"	64	15.75	25.2	85	70	148	216
1"	76.5	22.1	50.5	85	85	148	220
1.5"	99	34.8	50.5	85	100	148	230
2"	112	47.5	64	85	110	148	234.5
2.5"	141	60.2	77.5	85	125	148	253
3"	163	72.9	91	108	135	182	300
4"	194	97.4	119	108	170	182	318

Main Dimension (Welded Connection)

Size	A ±0.13	B ±0.13	C ±0.13	D ±0.3	L ±0.5	H1 ±2	H ±5
1/2"	64	9.4	12.7	85	70	148	216
3/4"	64	15.75	19.05	85	70	148	216
1"	76.5	22.1	25.4	85	85	148	220
1.5"	99	34.8	38.1	85	100	148	230
2"	112	47.5	50.8	85	110	148	234.5
2.5"	141	60.2	63.5	85	125	148	253
3"	163	72.9	76.2	108	135	182	300
4"	194	97.4	101.6	108	170	182	318

ESG®

Ball Valve

C10 Series
3-PC Tri-clamp Ball Valve
With Mounting Pad

C10 Series
3-PC Weld Ball Valve
With Mounting Pad

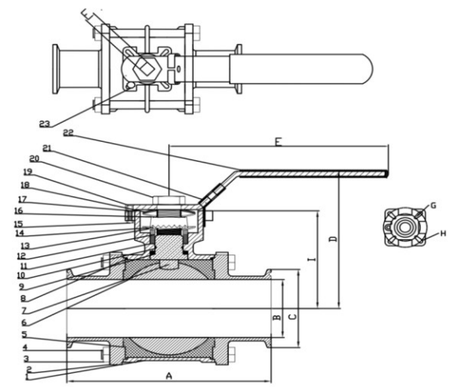

Tri-clamp

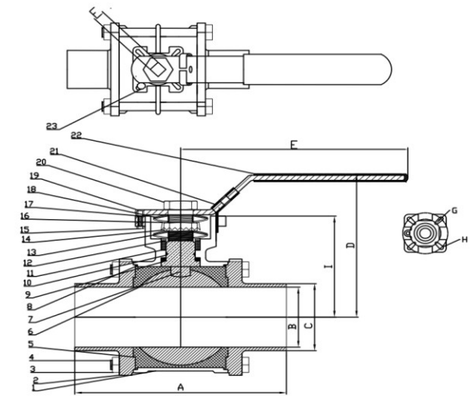

Welded

Function Principle

- Size: 1/2"–6"
- Working pressure: 10bar
- Body material: CF8/CF8M/316L
- Sealing material: PTFE
- Connection type: Tri–clamp 3A, welded 3A
- Internal surface: CNC machining Ra 0.6 μ m
- Temperature: –20℃~150℃
- Applications: Widely used in applications like food & beverage, brewery, pharmaceutical etc.

Order Instruction

C10 XXX XX X X (*) X

- Series No. — C10
- Size — XXX: D15、D20、D25、D32、D40、D50、D65、D80、100、150
- Connection type — XX: KA: Tri–clamp 3A; HA: Welded 3A
- Body material — X: 1: CF8; 2: CF8M; 6: 316L
- Sealing material — X: 1: PTFE; *: Customized sealing
- Special customization — (*)
- Accessory — X

Main dimension—Tri-clamp Ball Valve (Full-wrapped Ball Structure)

Size	A ± 0.3	B ± 0.06	C ± 0.06	D ± 1	E ± 1	F	G	H	I ± 1	Torque N.m
1/2"	90.5	9.4	25.2	64	131	9	F03	F04	37	4~10
3/4"	103.4	15.75	25.2	68	131	9	F03	F04	43	4~10
1"	114.2	22.1	50.5	86	169	11	F04	F05	51	5~15
1.25"	126	28.5	50.5	86	169	11	F04	F05	61	10~20
1.5"	136.7	34.8	50.5	122.5	213	14	F05	F07	71	10~25
2"	153.2	47.5	64	122.5	213	14	F05	F07	79	15~30
2.5"	167.3	60.2	77.5	139.5	213	14	F05	F07	94	20~35
3"	192.3	72.9	91	165	320	17	F07	F10	109.5	40~65
4"	239.5	97.4	119	177	320	17	F07	F10	123	40~80
6"	378	146.8	167	205	490	27	F10	F12	169	60~120

Main dimension—Welded Ball Valve (Full-wrapped Ball Structure)

Size	A ± 0.3	B ± 0.06	C ± 0.06	D ± 1	E ± 1	F	G	H	I ± 1	Torque N.m
1/2"	90.5	9.4	12.7	64	131	9	F03	F04	37	4~10
3/4"	103.4	15.75	19.05	68	131	9	F03	F04	43	4~10
1"	114.2	22.1	25.4	86	169	11	F04	F05	51	5~15
1.25"	126	28.5	31.8	86	169	11	F04	F05	61	10~20
1.5"	136.7	34.8	38.1	122.5	213	14	F05	F07	71	10~25
2"	153.2	47.5	50.8	122.5	213	14	F05	F07	79	15~30
2.5"	167.3	60.2	63.5	139.5	213	14	F05	F07	94	20~35
3"	192.3	72.9	76.2	165	320	17	F07	F10	109.5	40~65
4"	239.5	97.4	101.6	177	320	17	F07	F10	123	40~80
6"	378	146.8	152.4	205	490	27	F10	F12	169	60~120

ESG®

Ball Valve

C11 Series
Butterfly Tri-clamp
Ball Valve

C11 Series
Butterfly Welded
Ball Valve

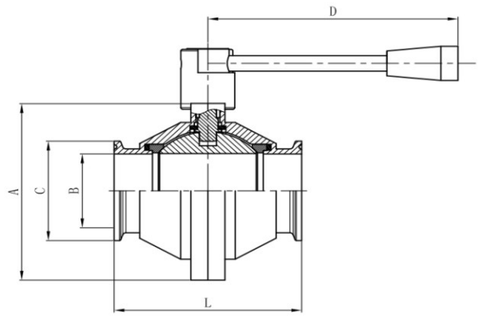

Tri–clamp

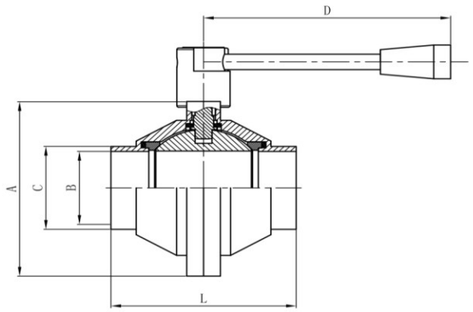

Welded

Technical Specification

- Size: 1/2"–4"
- Working pressure: 10bar
- Body material: CF8/CF8M/316L
- Sealing material: PTFE
- Connection type: Tri–clamp 3A, welded 3A
- Internal surface: CNC machining, Ra 0.6um
- Temperature: –20℃~150℃
- Applications: Widely used in food, beverages, brewery, pharmaceuticals industries etc.

Order Instruction

C11 XXX XX X X (*) X

- Series No. — C11
- Size — XXX: D15、D20、D25、D32、D40、D50、D65、D80、100
- Connection type — XX: KA: Tri–clamp 3A; HA: Welded 3A
- Body material — X: 1: CF8; 2: CF8M; 6: 316L
- Sealing material — X: 1: PTFE; *: Customized sealing
- Special customization — (*)
- Accessory — X

Main Dimension (Tri-clamp Connection)

Size	A ± 0.13	B ± 0.13	C ± 0.13	D ± 5	L ± 0.5
1/2"	64	9.4	25.2	140	70
3/4"	64	15.75	25.2	140	70
1"	76.5	22.1	50.5	140	85
1.5"	99	34.8	50.5	140	100
2"	112	47.5	64	140	110
2.5"	141	60.2	77.5	205	125
3"	163	72.9	91	205	135
4"	194	97.4	119	206	170

Main Dimension (Welded Connection)

Size	A ± 0.13	B ± 0.13	C ± 0.13	D ± 5	L ± 0.5
1/2"	64	9.4	12.7	140	70
3/4"	64	15.75	19.05	140	70
1"	76.5	22.1	25.4	140	85
1.5"	99	34.8	38.1	140	100
2"	112	47.5	50.8	140	110
2.5"	141	60.2	63.5	205	125
3"	163	72.9	76.2	205	135
4"	194	97.4	101.6	206	170

ESG®

Check Valve

D00 Series
Clamp Type Tri-clamp
Check Valve

D00 Series
Clamp Type Welded
Check Valve

Technical Specification

- Size: 1/2"–6"/DN15–DN150
- Working pressure: 10bar
- Body material: 304/316/316L
- Sealing material: EPDM
- Connection type: Tri–clamp 3A, welded 3A
- Temperature: –20℃~130℃
- Applications: Widely used in food, beverages, brewery, pharmaceuticals industries etc.

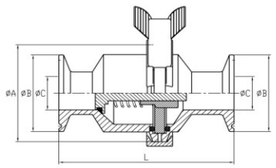

Tri–clamp

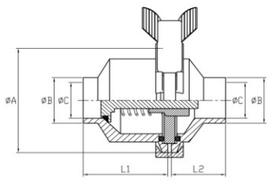

Welded

Main Dimension (Tri-clamp Connection)

Size	A	B	C	L
1/2"	50.5	25	9.5	88.9
3/4"	64	25	15.8	88.9
1"	64	50.5	22.1	104.8
1.5"	77.5	50.5	34.8	115.9
2"	91	64	47.5	128.6
2.5"	106	77.5	60.3	136.5
3"	119	91	73.0	155.6
4"	144.5	119	97.6	206.4

Main Dimension (Welded Connection)

Size	A	B	C	L1	L2
1/2"	50.5	12.7	9.4	35	22
3/4"	64	19.05	15.75	35	22
1"	64	25.4	22.1	47.5	30.5
1.5"	77.5	38.1	34.8	50	30
2"	91	50.8	47.5	58	30
2.5"	106	63.5	60.2	58	37
3"	119	76.2	72.9	70	36
4"	144.5	101.6	97.6	68	37
6"	217	152.4	146.8	156	59

Order Instruction

D00 XXX XX X X (*) X

- Series No. — D00
- Size — XXX: D15、D20、D25、D40、D50、D65、D80、100、150
- Connection type — XX: KA: Tri–clamp 3A; HA: Welded 3A
- Body material — X: 3: 304; 4: 316; 6: 316L
- Sealing material — X: 1: EPDM; *: Customized sealing
- Special customization — (*)
- Accessory — X

Control Accessory

0S2/0S3 Series
Position Indicator

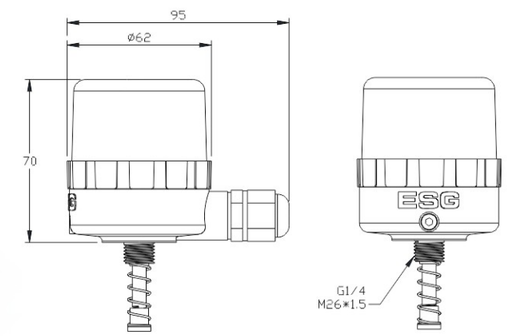

Technical Specification

- Stroke range: 5–35mm (Mechanical type)
  /5–30mm (Contactless type)
- Voltage: 12V DC–36V DC (Mechanical type)
  /12V DC~30V DC (Contactless type)
- Current: MAX.300mA (Mechanical type)
  /MAX.100mA (Contactless type)
- Indication Light: Visually feedbacks the valve's open/close status
- Temperature range: –20℃ – +70℃
- Storage temperature: –30℃ — +80℃
- Ambient humidity: ≤90%RH
- Protection level: IP65
- Explosion–proof: Ex nA IIC T4
- Enclosure material: PA6–GF30+PC
- Main dimension: Φ62x70
- Installation interface: G1/4, M26x1.5
- Wiring method: Unscrew the transparent cover, thread the cable through the cable opening and connect it to the required terminal.

Advantages

1. Compact size to save space.
2. Reliable performance and sensitive reaction.
3. Spring–loaded and threaded connection are easily interchangeable.
4. Quick installation and allows 360° rotation adjustment.
5. Unique slider adjustment, convenient adjustment and precise position.
6. Screw–free terminal block makes wiring more convenient.
7. Waterproof cable lock ensures internal dustproof and moisture proof.
8. A variety of input/output modes canbe realized through simple adjustments.
9. Using magnetic switch toachieve contactless feedback,prolong the service life.

Function Principle

It is used to detect and feedback both open and closed states of the connected valve.

Electrical Schematic

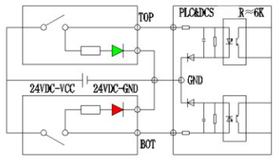

4–wire PNP

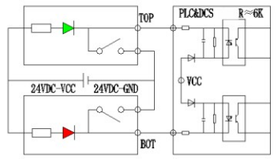

4–wire NPN

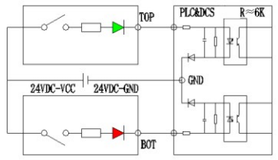

3–wire PNP

Order Instruction

0SX XXX XX XX (*)

- Position indicator — 0SX: 0S2: Mechanical type multiple output 4–wire PNP/4–wire NPN/3–wire PNP; 0S3: Contactless type multiple output 4–wire PNP/4–wire NPN/3–wire PNP
- Connection type — XXX: G14 : G1/4; M26 : M26
- Max stroke (mm) — XX: 35: 35; 30: 30
- Operating voltage — XX: D3: 12–36V DC; D4: 12–30V DC
- Special customization — (*)

ESG®

Control Accessory

OP0 Series Intelligent Positioner

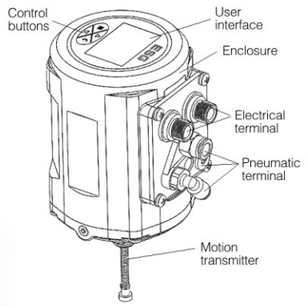

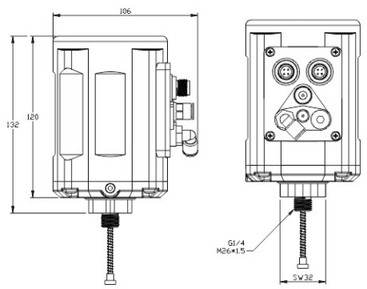

Technical Specification

- Stroke range: 5–13mm, 10–28mm
- Voltage: 24V DC
- Power: <10W
- Input signal: 0/4–20mA, 0–5/10V
- Output signal: 0/4–20mA, 0–5/10V
- Enclosure material: PA6–GF30+PC
- Main dimension: Φ85x132
- Control pressure: 3~7bar (44–102psi)
- Temperature range: 0–60℃
- Protection level: IP65
- Explosion–proof: Ex nA IIC T4
- Mounting interface: G1/4 or M26x1.5 (can be customized)

Advantages

1. Compact size to save space.
2. Reliable performance and sensitive reaction.
3. Large LCD display makes it easy to operate.
4. Standard electrical interface allows convenient wiring.
5. High adjustment precision and strong anti–interference performance.
6. Spring–loaded feedback rod for easy installation.
7. Allows various types of connection interface.

Function Principle

Intelligent positioner is a microprocessor–based valve regulator. The valve's open/close state is controlled by external input signals. It is widely used in industrial fluids control systems in order to enable remote and automated control.

Electrical Terminal

Port Label	Terminal #	Description	Signal Type
X1	1	Analog signal output +	0/4–20mA or 0–5/10V
	2	Analog signal output –	GND
	3	Improper position alarm output	High level (Display UN–ADJ)
	4	Safe position trigger input	High level
	5	Signal common GND	GND
X2	1	Power +	+24V
	2	Power GND	GND
	3	Set signal input +	0/4–20mA or 0–5/10V
	4	Set signal input to GND	GND

Pneumatic Terminal

Port Label	Description
P	Air input
A1	Pilot port 1
A2	Pilot port 2
R	Exhaust port

Interface Definition

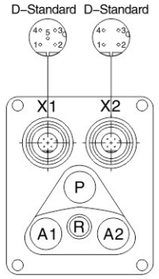

OP1 Series Two-piece Intelligent Positioner

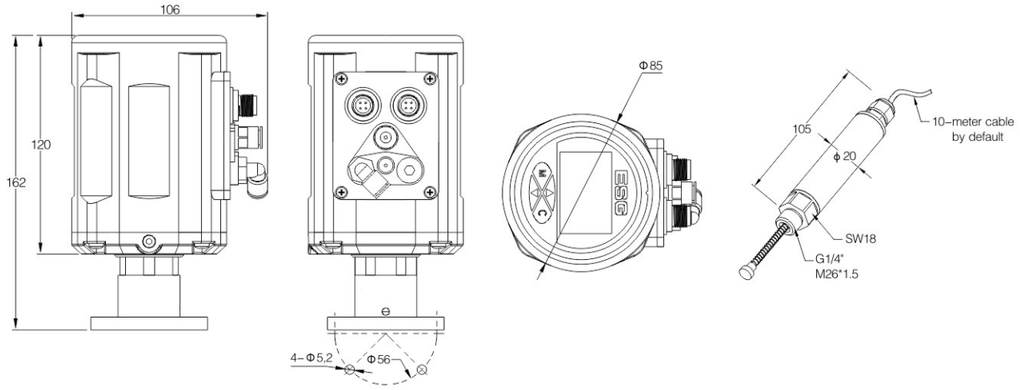

Order Instruction

0P0/0P1 X XXX XX XX (*)

- Series No. — 0P0/0P1
- Control type — X: 4 :Single acting
- Connection type — XXX: G14: G1/4; M26: M26
- Max stroke (mm): 15、30 — XX
- Operating voltage — XX: D1: 24V DC
- Special customization — (*)

Control accessory

ESG®

Seal Materials Chemical Compatibility Guide

Chemicals	NBR	EPDM	FPM	PTFE
Acetic acid–pure	–	O	–	+
Acetone–pure	–	+	–	+
Ammonia (gaseous)–pure	–	+	O	+
Ammonia (liquid)–pure	–	O	O	+
Battery acid (sulphuric acid 20%)	O	+	+	+
Brine (cooling brine)	+	+	+	+
Calcium hydroxide (lime water)–Aqueous	+	+	+	+
Carbon dioxide (dry)–pure	+	O	+	+
Carbon dioxide (humid)	+	O	O	+
Chlorinated lime (calcium hypochlorite)–aqueous	–	+	O	+
Chlorine bleaching lye (sodium hypo–chlorite)–aqueous	–	+	O	+
Chlorine (gaseous)–dry	–	–	O	+
Chlorine (liquid)– pure	–	–	O	+
Chlorine water (chlorine–humid)	–	–	O	+
Citric acid–aqueous	+	+	+	+
Dextrose (glycose)– aqueous	+	+	+	+
Ethyl alcohol (ethanol)–pure	O	+	O	+
Ethyl alcohol + acetic acid	O	+	O	+
Ethyl alcohol–fermented mash	+	+	+	+
Ethylene glycol (glycol)–pure	+	+	+	+
Formaldehyde solution (formalin)–aqueous	O	O	O	+
Glycerine–aqueous	+	+	+	+
Glycerine–pure	O	+	+	+
Inert gases–pure	+	+	+	+
Lactic acid–aqueous	O	O	+	+
Malic acid–aqueous	+	+	+	+
Methanol (methyl alcohol)–pure	–	+	–	+
Nitrogen–pure	+	+	+	+
Oxygen–pure	O	O	+	+
Ozone (humid and dry)	–	O	O	+
Silicone oil	+	+	+	+
Soda lye (sodium hydroxide)–aqueous	O	+	O	+
Sodium carbonate (soda)–aqueous	+	+	+	+
Sodium chloride (table salt)–aqueous	+	+	+	+
Sodium hydrogen carbonate (sodium bi–carbonate)–aqueous	+	+	+	+
Sodium hypochlorite (chlorine bleachinglye)–aqueous	–	O	+	+
Starch solution–aqueous	+	+	+	+
Toluene–pure	–	–	O	+
Water–distilled	+	+	+	+
Water (seawater)	+	+	+	+
Water vapour (130℃)	O	+	+	+
Yeast–aqueous	+	+	+	+

+: suitable O: limited suitability –: unsuitable
Limited suitability parts are rated as wear parts and are not included in the standard warranty conditions.